COLLEGE OF VISUAL AND PERFORMING ARTS

CVPA Mission Statement:
The College of Visual and Performing Arts (CVPA) at the University of Massachusetts Dartmouth is a comprehensive arts college where students, faculty, professionals, and audiences from diverse cultural communities come together to develop a high degree of professional competence, explore connections, develop new modes of communication, and engage in the process of making art. CVPA's multi-disciplinary program prepares students for careers in the arts, and gives students the tools to enter a number of diverse careers.

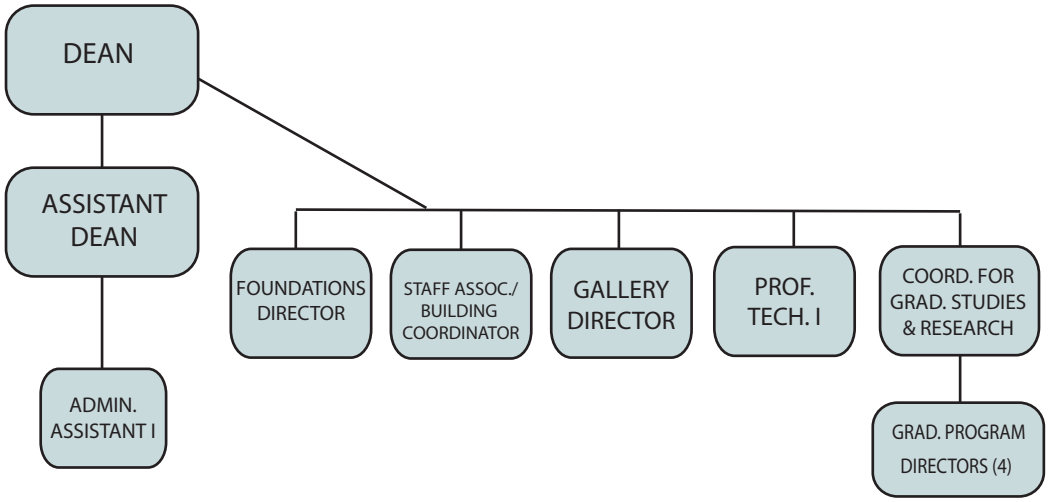

CVPA Goals and Objectives:
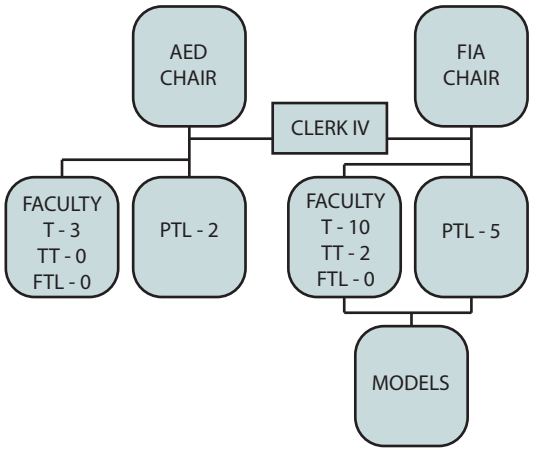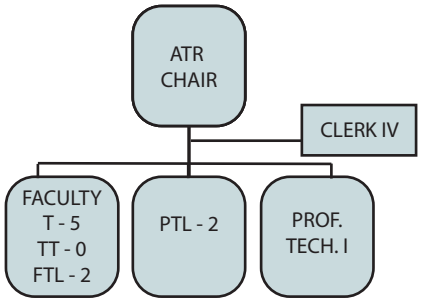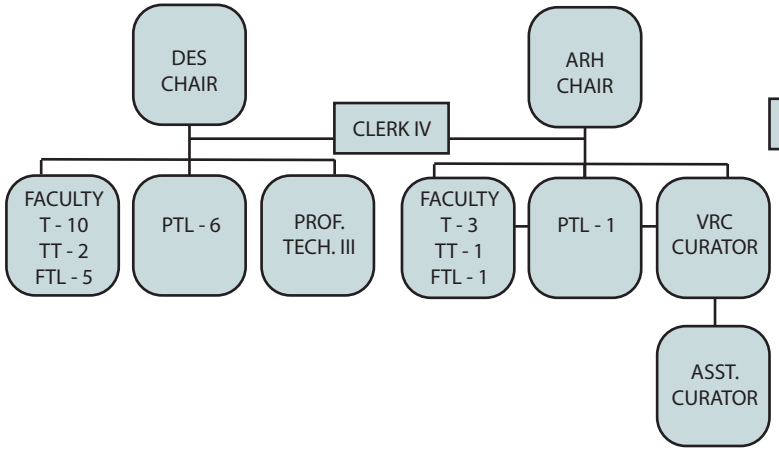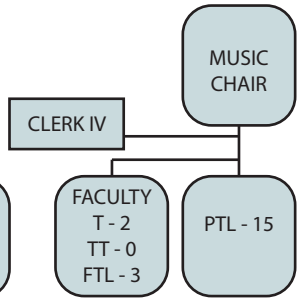
1. Prepare Students in the Arts through the Integration of Innovative Teaching Strategies.
2. A vibrant arts community of respectful learners, scholars, and practitioners is sustained and supported.
3. The teaching, learning, scholarly and creative activities of our faculty and students are engaged with the activities of the region and benefit the community.
4. Prepare Students in the Arts to be global citizens through classes in cultural history, performance, and practice that show the diversity of our roots and teach the importance of mutual respect and understanding.
5. An effective physical, technical, fiscal and human infrastructure is in place to support academic activities.